EDITION 01 2K25

MORZZE
Beyond Excellence...
By Anupam GROUP

aura collection

Radiate Brilliance With Aura

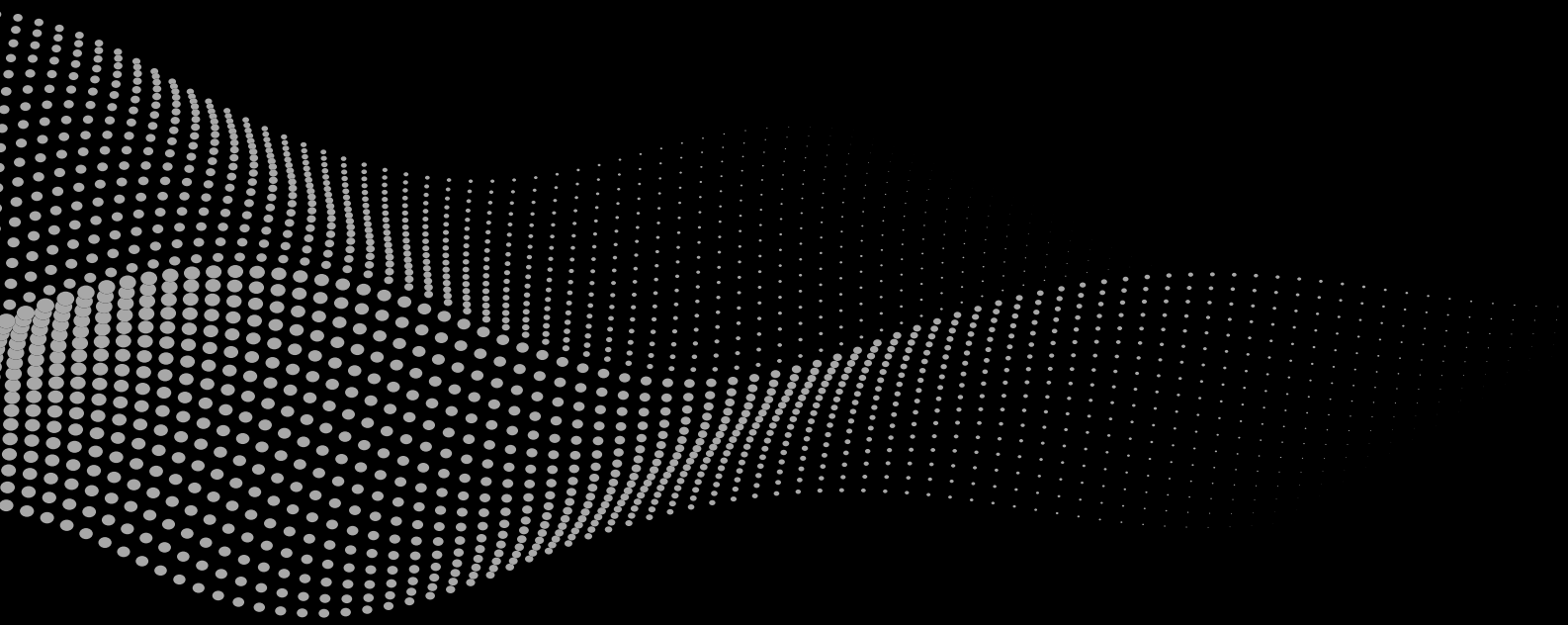

MORZZE

Beyond Excellence...

Crafting Exceptional Spaces

www.morzze.com

MORZZE
Beyond Excellence...

The Heart of Every Home

Kitchen is the most important space in the house. When it looks good, you will also feel good. Our products transform a simple kitchen into something so much more, A haven. For you and for your family

STAINLESS STEEL SINK

aura collection

A01-201 / **18x16**

A01-202 / **21x18**

A01-203 / **24x18**

A01-204 / **30x18**

A02-205 / **37x18**

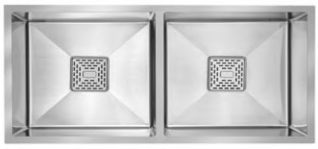

A02-206 / **45x20**

A03-207 / **36x18**

Conté

MORZZE
Beyond Excellence...

aura collection

A01-208LX / **24x18**

A01-209LX / **30x20**

A02-210LX / **32x20**

A02-211LX / **36x20**

A02-212LX / **42x20**

A02-213LX / **45x20**

MORZZE
Beyond Excellence...

Model Code : **A01-201**
Sink Size : 457x406x200mm / 18”x16”x8”
Cut Out Size : 420x365mm
Cabinet Size : 500mm

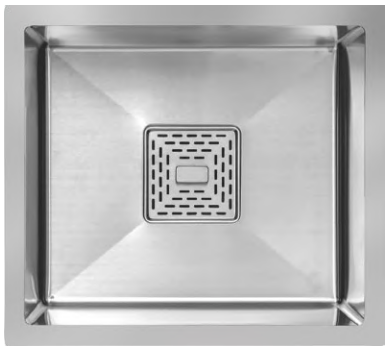

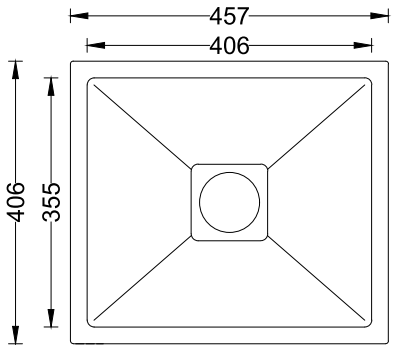

ACCESSORIES

Strainer

Strainer Cover

Model Code : **A01-202**
Sink Size : 533x457x200mm / 21”x18”x8”
Cut Out Size : 495x420mm
Cabinet Size : 600mm

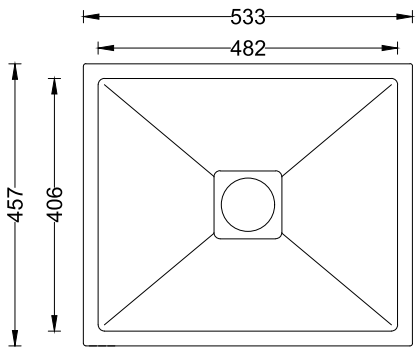

ACCESSORIES

Strainer

Strainer Cover

Model Code : **A01-203**
Sink Size : 610x457x228mm / 24”x18”x9”
Cut Out Size : 570x420mm
Cabinet Size : 650mm

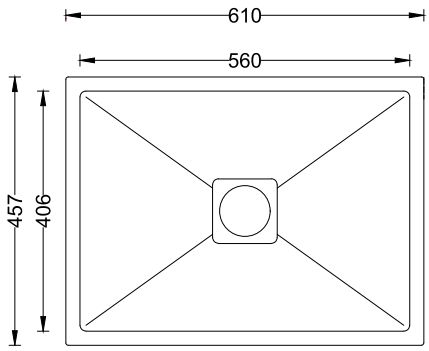

ACCESSORIES

Strainer

Strainer Cover

Model Code : **A01-204**
Sink Size : 762x457x228mm / 30”x18”x9”
Cut Out Size : 725x420mm
Cabinet Size : 900mm

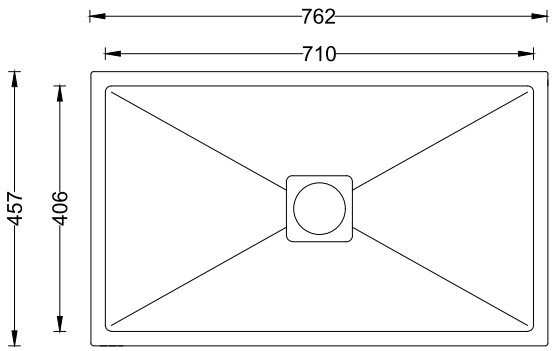

ACCESSORIES

Strainer

Strainer Cover

Model Code : **A02-205**
Sink Size : 940x457x228mm / 37”x18”x9”
Cut Out Size : 900x420mm
Cabinet Size : 1000mm

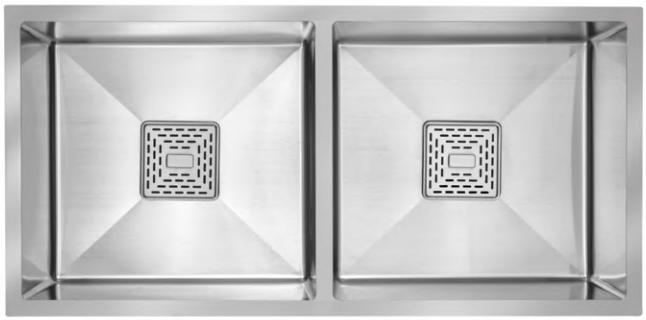

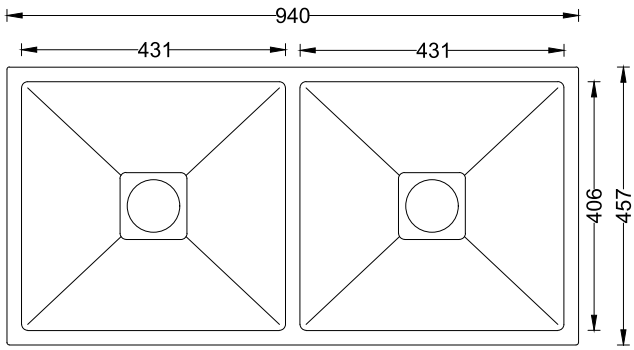

ACCESSORIES

Strainer

Strainer Cover

Model Code : **A02-206**
Sink Size : 1143x508x228mm / 45”x20”x9”
Cut Out Size : 1105x470mm
Cabinet Size : 1200mm

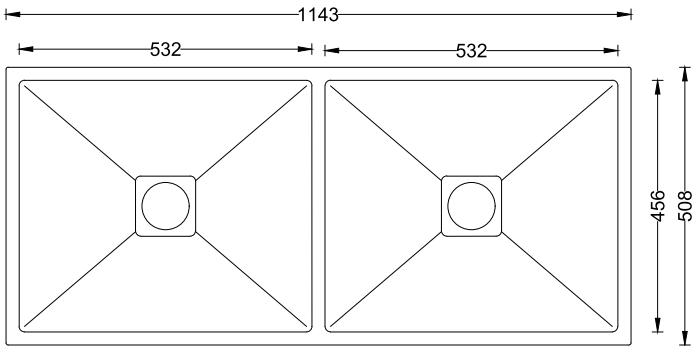

ACCESSORIES

Strainer

Strainer Cover

MORZZE
Beyond Excellence...

Model Code : **A03-207**
Sink Size : 915x457x228mm / 36”x18”x9”
Cut Out Size : 875x420mm
Cabinet Size : 1000mm

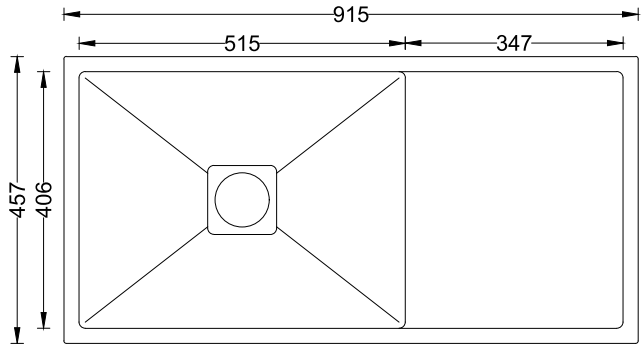

ACCESSORIES

Strainer

Strainer Cover

Model Code : **A01-208LX**
Sink Size : 610x460x228mm / 24”x18”x9”
Cut Out Size : 570x420mm
Cabinet Size : 650mm

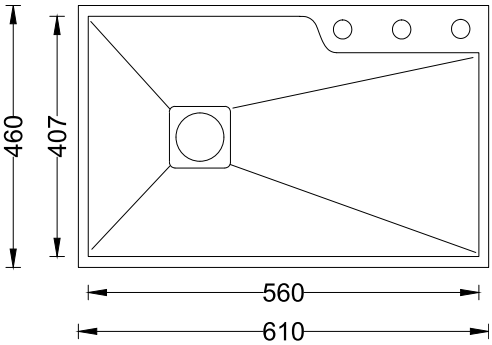

ACCESSORIES

Faucet

Hand Shower

Liquid Soap Dispenser

Strainer

Strainer Cover

MORZZE
Beyond Excellence...

Model Code : **A01-209LX**
Sink Size : 762x508x228mm / 30”x20”x9”
Cut Out Size : 725x470mm
Cabinet Size : 800mm

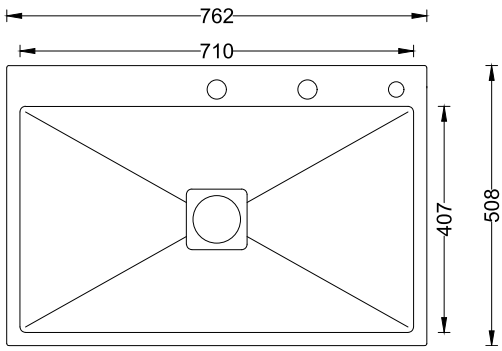

ACCESSORIES

Faucet

Hand Shower

Liquid Soap Dispenser

Strainer

Strainer Cover

Model Code : **A02-210LX**
Sink Size : 813x508x228mm / 32”x20”x9”
Cut Out Size : 775x470mm
Cabinet Size : 900mm

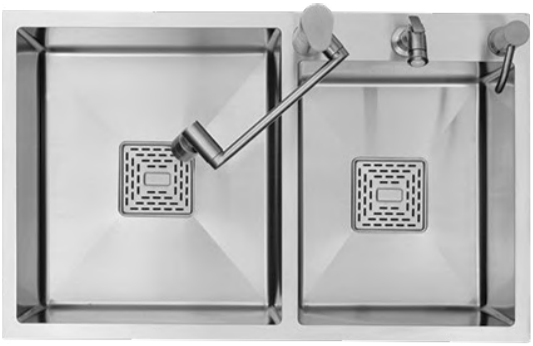

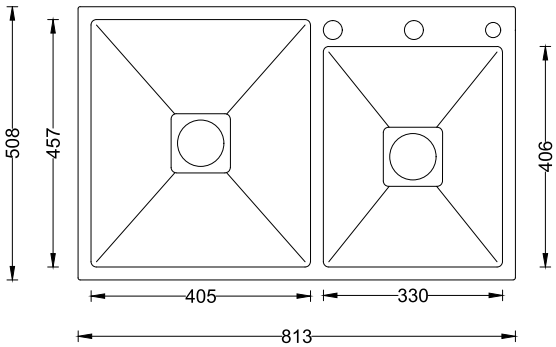

ACCESSORIES

Faucet | Hand Shower | Liquid Soap Dispenser | Strainer | Strainer Cover

MORZZE

Model Code : **A02-211LX**
Sink Size : 915x508x228mm / 36”x20”x9”
Cut Out Size : 875x470mm
Cabinet Size : 1000mm

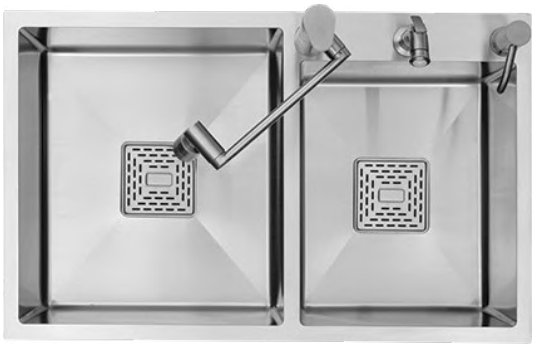

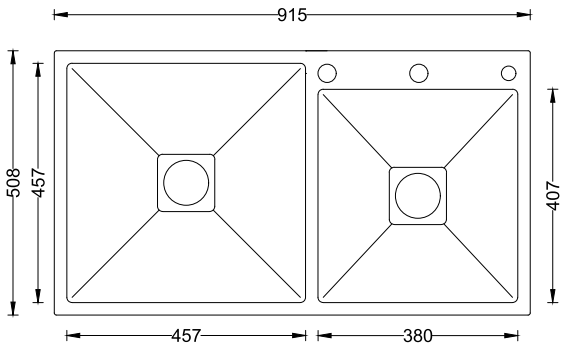

ACCESSORIES

Faucet

Hand Shower

Liquid Soap Dispenser

Strainer

Strainer Cover

Model Code : **A02-212LX**
Sink Size : 1067x508x228mm / 42”x20”x9”
Cut Out Size : 1030x470mm
Cabinet Size : 1100mm

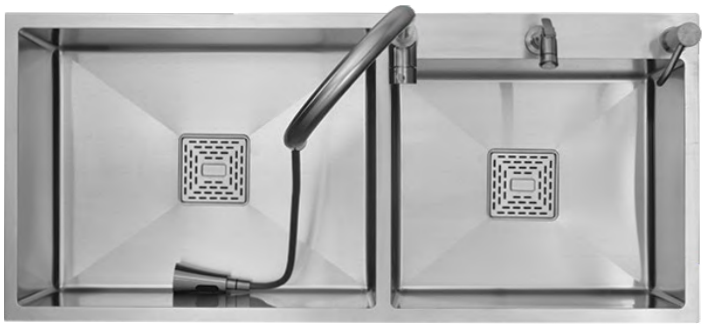

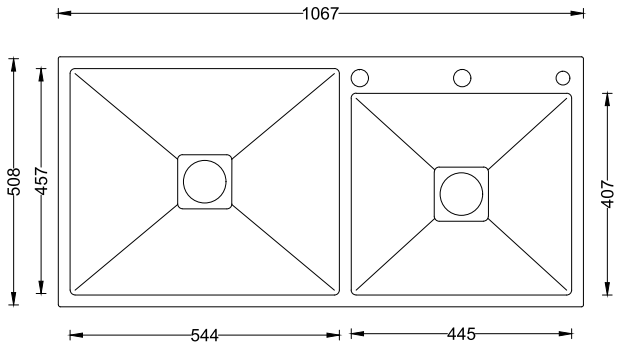

ACCESSORIES

Faucet | Hand Shower | Liquid Soap Dispenser | Strainer | Strainer Cover

Model Code : **A02-213LX**
Sink Size : 1143x508x228mm / 45”x20”x9”
Cut Out Size : 1105x470mm
Cabinet Size : 1200mm

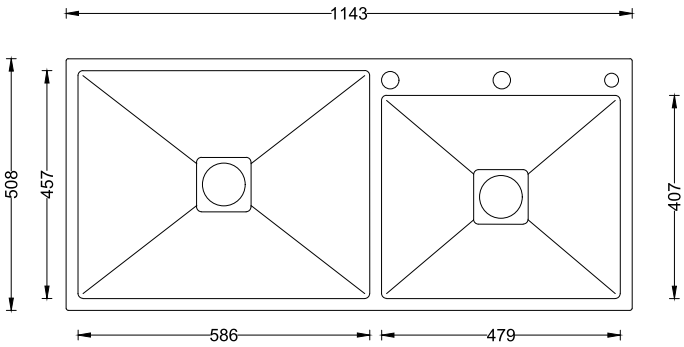

ACCESSORIES

Faucet | Hand Shower | Liquid Soap Dispenser | Strainer | Strainer Cover

MORZZE

Beyond Excellence...

Anupam GROUP

Corporate Office:

Anupam Retail Limited
A-42, Phase-I, Naraina Industrial Area
New Delhi-110028

Email: info@morzze.com
Website: www.morzze.com
Helpline: 1800 110 123

Morzze Reserves the right to amend its products without prior notification, as deemed appropriate to improve their features. Therefore, all designs, diagrams and measurements in this catalogue are not binding but provided as a mere indication. Actual product shape and size may vary from the image shown. Accessories shown in the pictures are not part of standard offering. Photographs and colour may differ from standard offer. Faucet, Waste Coupling, or any accessory's design and model may vary as shown in the included accessories.

FIND US!

FIND US!

www.morzze.com

@morzzeindia